Portfolio

Research

Year-Round Research Project: Fisnar-Robot-Plugin

August 2021 - Present

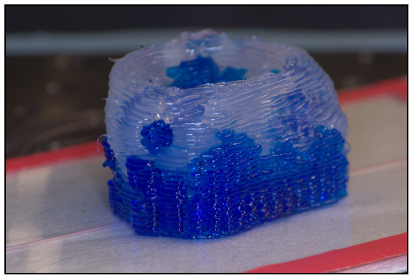

Working in the McAlpine Research Group, I've been developing software that enables high-precision robots to print CAD models and execute pick-and-place maneuvers. This software comes in the form of a plugin written for Ultimaker's Cura slicing software. Using RS232 serial communication, FisnarRobotPlugin allows Fisnar gantry robots to execute commands generated by Cura's slicing algorithm. It also includes user interfaces for manually controlling the robots and generating pick-and-place procedures. The plugin is written in Python (PyQt) and QML, as is Cura. FisnarRobotPlugin is currently published on the Ultimaker Marketplace, where it has over 300 downloads.

Ultimaker Marketplace Posting GitHub Site Demo Video

CAD Samples

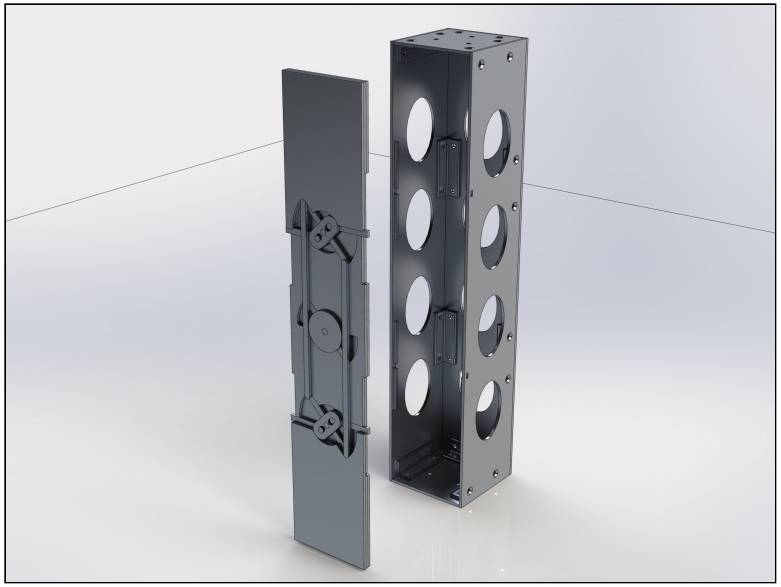

Onboard Rocket Payload Case - Solidworks

Personalized Gaming Headset Stand - Solidworks

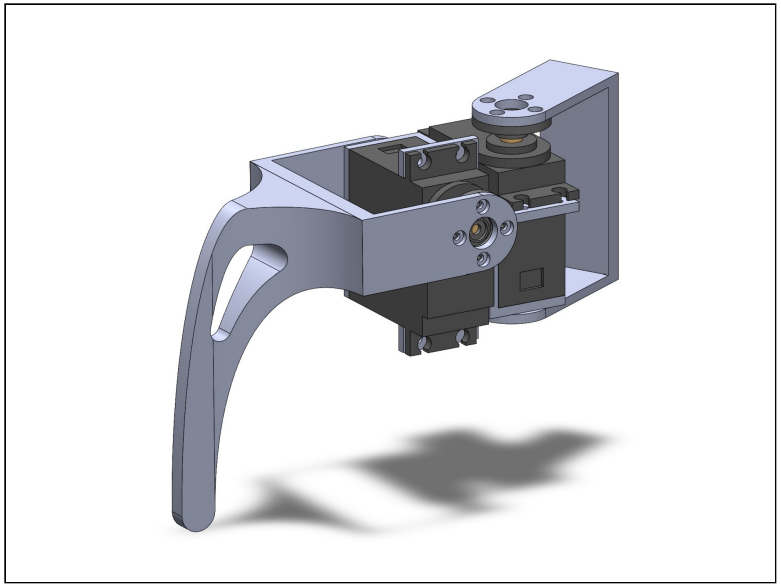

Hexapod Leg Model (with Servos) - Solidworks

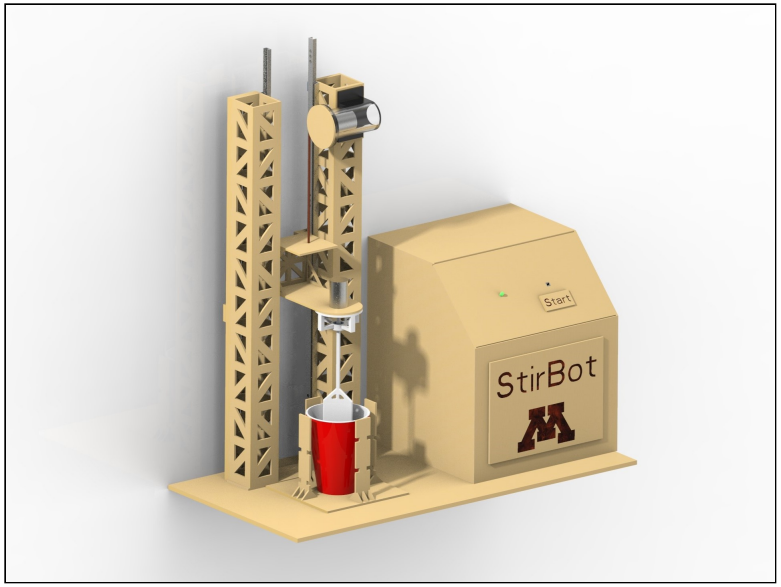

ME 2011 Robot Model: StirBot - Creo Parametric

University Projects

UMN Rocket Team 2022 SA Cup: Onboard Payload Case

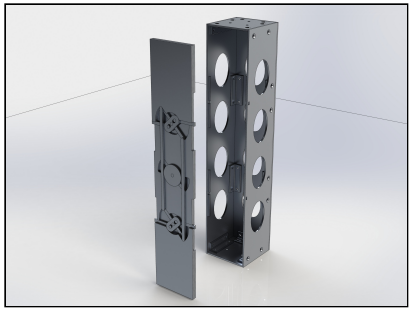

Fall 2021 - Spring 2022

For the Spaceport America Cup competition, we (the Payload subteam) were tasked with designing a modular drone to ride onboard the rocket, that could be quickly assembled and flown upon landing. I primarily worked on the case in which the drone was housed onboard the rocket. This case was designed to fit inside a 5U cubesat form-factor, and was fabricated from aluminum sheets, 3D printed parts, and standard hardware. Aligned with the goal of making the drone quick to assemble, the case lid was secured with two spring-loaded rotational mechanisms. Our rocket ended up placing 4th in the SA Cup competition.

UMN Spaceport America Competition Website

ME 2011 - Introduction to Engineering: StirBot

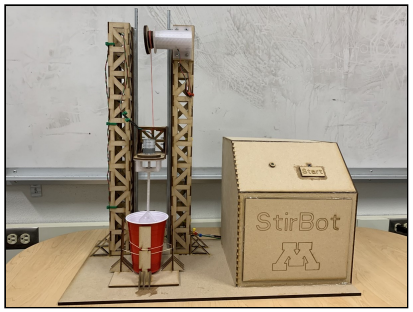

Fall 2021

Designed and built as a part of ME 2011, StirBot is a robot that stirs beverages. It was modeled in Creo Parametric and fabricated from laser-cut MDF sheets, 3D printed parts, and some other mechanical components I found at surplus stores. The motors are powered by a rechargeable battery and controlled birectionally by a relay circuit connected to an Arduino, where the limit-switch data is also sent. The electrical schematics were designed in KiCAD. Stirbot was designed under a budget of $50, and was showcased at the semster-end robot show.

Electrical Schematics Bill of Materials Rechargeable Battery Time Study